REVISIONS				
ZONE	LTR	DESCRIPTION	DATE	APPROVED
—		SEE SHEET 1 FOR REVISIONS C TC	10-28-80	A. ARON

PARTS LIST				
QTY REQD	CODE IDENT	PART OR IDENTIFYING NO.	NOMENCLATURE OR DESCRIPTION	

UNLESS OTHERWISE SPECIFIED DIMENSIONS ARE IN INCHES
TOLERANCES ARE:
FRACTIONS ± DECIMALS .XX ± .XXX ± ANGLES ±

MATERIAL

FINISH

NEXT ASSY | USED ON

APPLICATION

DO NOT SCALE DRAWING

CONTRACT NO.

APPROVALS	DATE
DRAWN Wagner	9/17/80
CHECKED Jack Teague	10-26-80
R.A.H.	10-29-80

Gremlin Industries, Inc.
San Diego, California 92121

CPU Board

SIZE	CODE IDENT NO.	DRAWING NO.	REV
D		800-0107	E

SCALE 1:1 ON E — SHEET 6 OF 7

800-0107 E

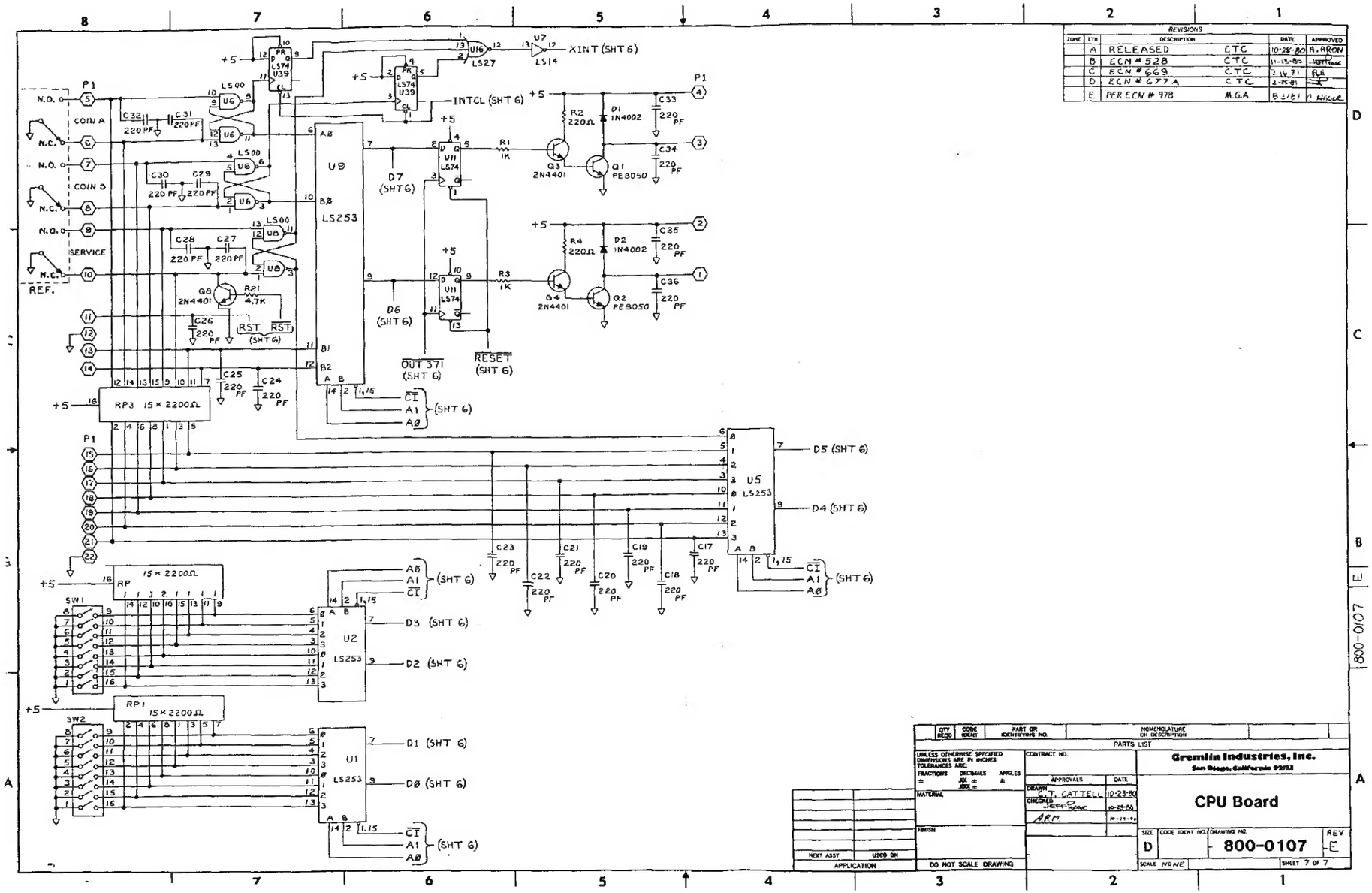

REVISIONS					
ZONE	LTR	DESCRIPTION		DATE	APPROVED
	A	RELEASED	CTC	10-28-80	A. ARON
	B	ECN # 528	CTC	11-13-80	[illegible]
	C	ECN # 669	CTC	2-16-81	[illegible]
	D	ECN # 677A	CTC	2-25-81	[illegible]
	E	PER ECN # 978	M.G.A.	8-31-81	[illegible]

QTY REQD	CODE IDENT	PART OR IDENTIFYING NO.	NOMENCLATURE OR DESCRIPTION

PARTS LIST

UNLESS OTHERWISE SPECIFIED DIMENSIONS ARE IN INCHES TOLERANCES ARE: FRACTIONS ± DECIMALS .XX ± .XXX ± ANGLES ±

MATERIAL

FINISH

NEXT ASSY | USED ON

APPLICATION

DO NOT SCALE DRAWING

CONTRACT NO.

APPROVALS	DATE
DRAWN G.T. CATTELL	10-23-80
CHECKED [illegible]	10-28-80
ARM	10-29-80

Gremlin Industries, Inc.
San Diego, California 92123

CPU Board

SIZE D | CODE IDENT NO. | DRAWING NO. 800-0107 | REV E

SCALE NONE | SHEET 7 OF 7

800-0107

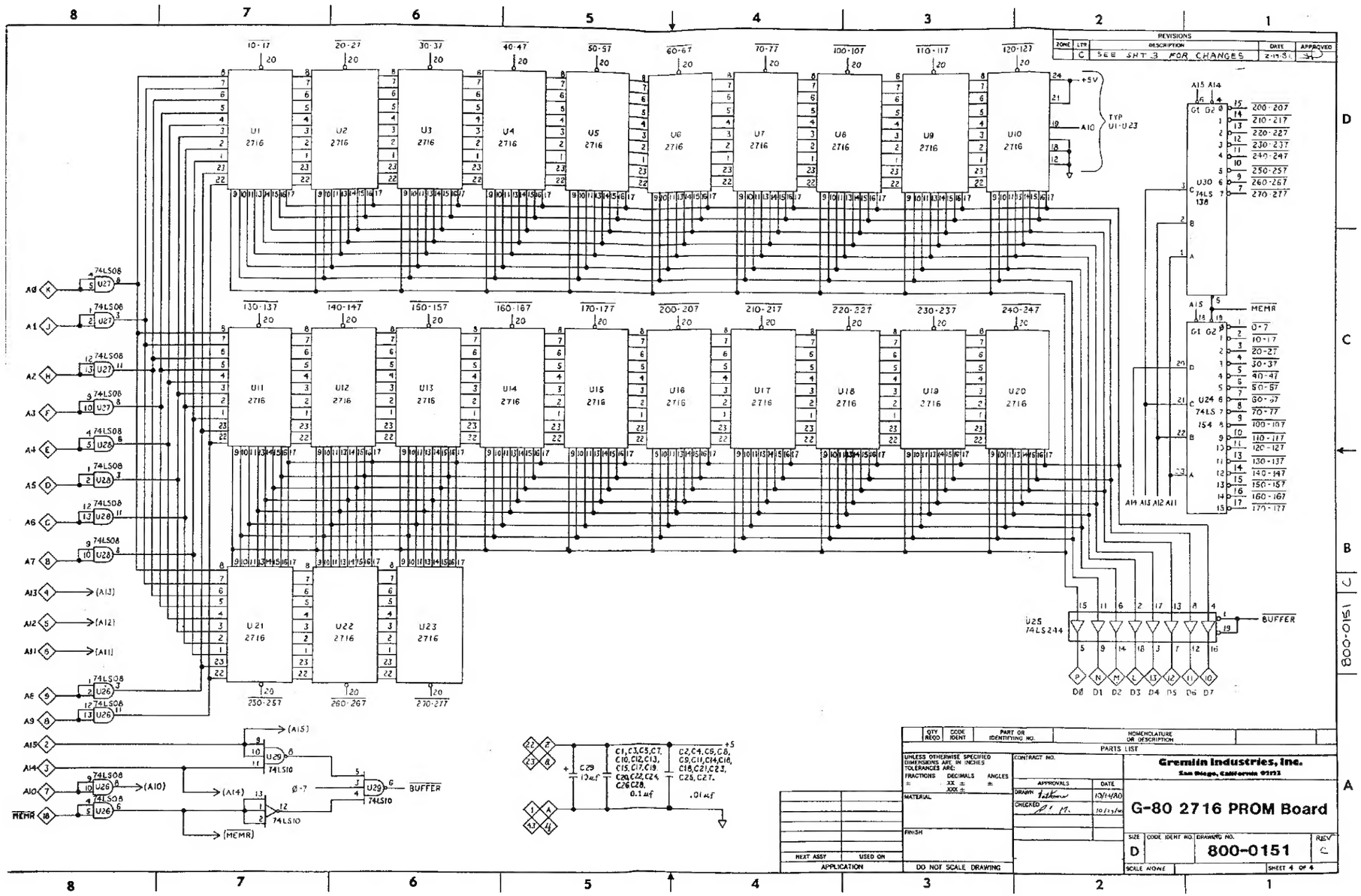

REVISIONS
ZONE LTR DESCRIPTION DATE APPROVED
C SEE SHT 3 FOR CHANGES 2-19-81
U1 2716
U2 2716
U3 2716
U4 2716
U5 2716
U6 2716
U7 2716
U8 2716
U9 2716
U10 2716
U11 2716
U12 2716
U13 2716
U14 2716
U15 2716
U16 2716
U17 2716
U18 2716
U19 2716
U20 2716
U21 2716
U22 2716
U23 2716
U30 74LS 138
U24 74LS 154
U25 74LS244
TYP U1-U23
MEMR
BUFFER
74LS08
74LS10
C29 10uf
C1,C3,C5,C7, C10,C12,C13, C15,C17,C19, C20,C22,C24, C26,C28, 0.1uf
C2,C4,C6,C8, C9,C11,C14,C16, C18,C21,C23, C25,C27, .01uf
PARTS LIST
UNLESS OTHERWISE SPECIFIED DIMENSIONS ARE IN INCHES TOLERANCES ARE:
FRACTIONS ± DECIMALS .XX ± .XXX ± ANGLES ±
MATERIAL
FINISH
NEXT ASSY USED ON
APPLICATION
DO NOT SCALE DRAWING
CONTRACT NO.
APPROVALS DATE
DRAWN 10/14/80
CHECKED 10/23/80
Gremlin Industries, Inc.
San Diego, California 92123
G-80 2716 PROM Board
SIZE D
CODE IDENT NO.
DRAWING NO. 800-0151
REV C
SCALE NONE
SHEET 4 OF 4
800-0151

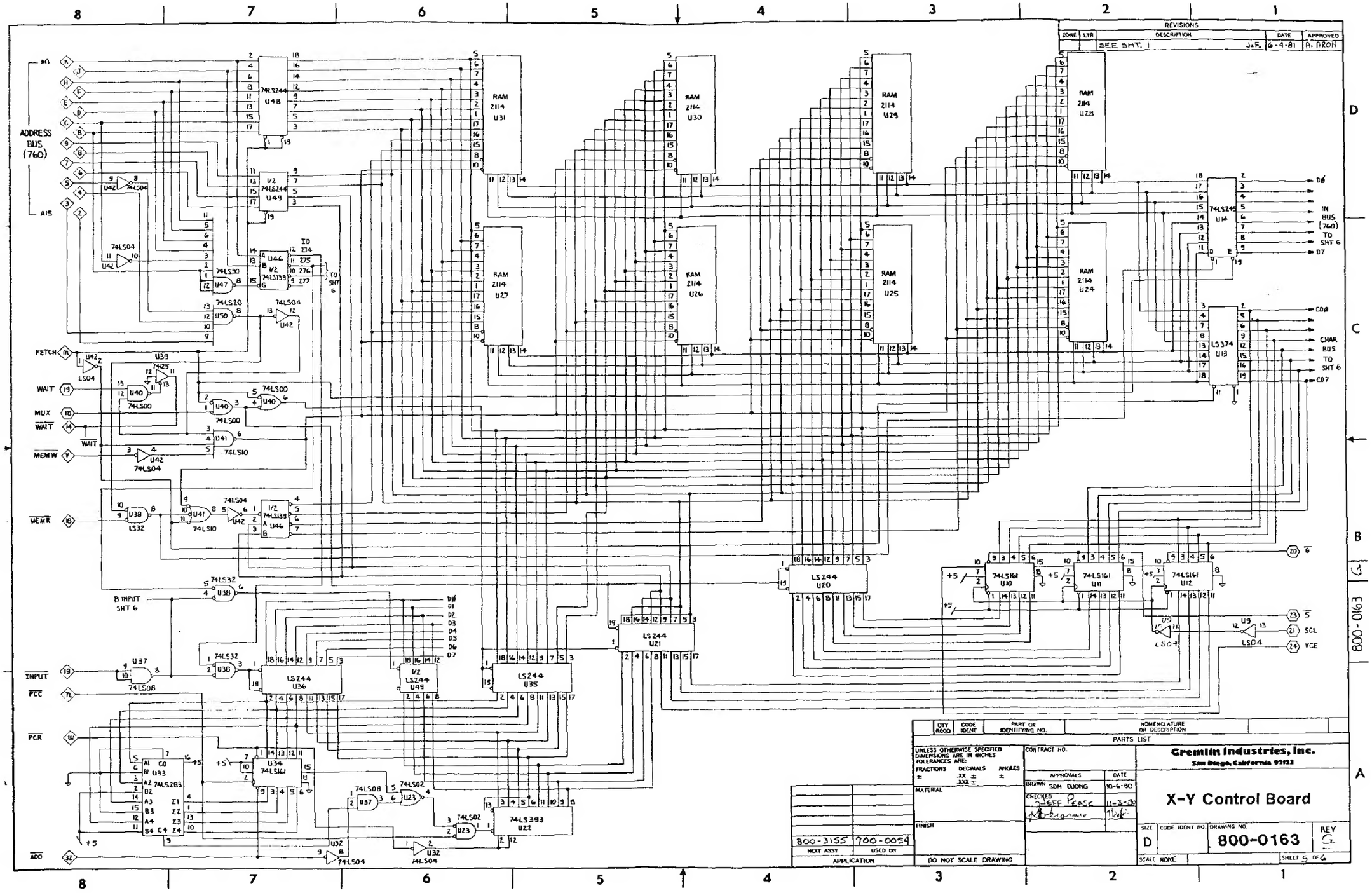
REVISIONS
ZONE | LTR | DESCRIPTION | DATE | APPROVED
SEE SHT. 1 | J.F. | 6-4-81 | A. ARON
ADDRESS BUS (760)
A0
A15
FETCH
WAIT
MUX
MEMW
MEMR
B INPUT SHT 6
INPUT
PCC
PCR
ADD
RAM 2114 U31
RAM 2114 U30
RAM 2114 U29
RAM 2114 U28
RAM 2114 U27
RAM 2114 U26
RAM 2114 U25
RAM 2114 U24
74LS244 U48
74LS244 U49
74LS245 U14
LS374 U13
LS244 U20
LS244 U21
LS244 U36
LS244 U35
74LS161 U10
74LS161 U11
74LS161 U12
74LS161 U34
74LS283 U33
74LS393 U22
74LS139 U46
74LS139 U2
74LS30 U47
74LS20 U50
74LS00 U40
74LS04 U42
74LS10 U41
74LS32 U38
74LS08 U37
74LS02 U23
74LS25 U39
LS32
LS04
D0
IN BUS (760) TO SHT 6
D7
CD0
CHAR BUS TO SHT 6
CD7
6
5
SCL
VCE
800-0163
PARTS LIST
QTY REQD | CODE IDENT | PART OR IDENTIFYING NO. | NOMENCLATURE OR DESCRIPTION
UNLESS OTHERWISE SPECIFIED DIMENSIONS ARE IN INCHES TOLERANCES ARE:
FRACTIONS ± | DECIMALS .XX ± .XXX ± | ANGLES ±
MATERIAL
FINISH
800-3155 | 700-0054
NEXT ASSY | USED ON
APPLICATION
DO NOT SCALE DRAWING
CONTRACT NO.
APPROVALS | DATE
DRAWN SON DUONG | 10-6-80
CHECKED JEFF PEASE | 11-3-80
Gremlin Industries, Inc.
San Diego, California 92123
X-Y Control Board
SIZE D | CODE IDENT NO. | DRAWING NO. 800-0163 | REV G
SCALE NONE
SHEET 5 OF 6

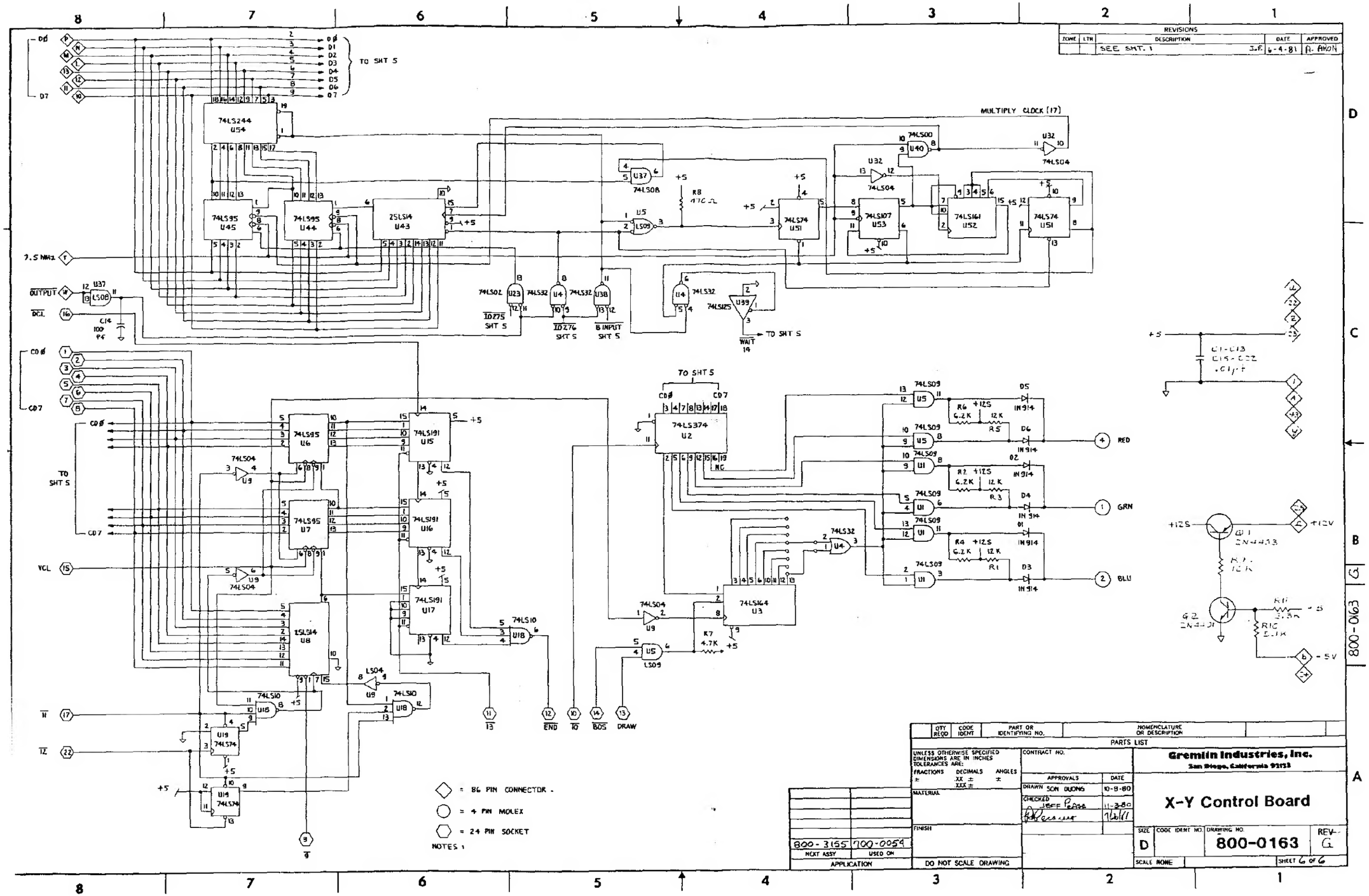

REVISIONS
ZONE | LTR | DESCRIPTION | DATE | APPROVED
SEE SHT. 1 | J.F. | 6-4-81 | A. ARON
TO SHT 5
MULTIPLY CLOCK (17)
74LS244 U54
74LS95 U45
74LS95 U44
25LS14 U43
74LS74 U51
74LS107 U53
74LS161 U52
74LS74 U51
74LS02 U23
74LS32 U4
74LS32 U38
74LS125 U39
74LS374 U2
74LS164 U3
74LS95 U6
74LS95 U7
74LS191 U15
74LS191 U16
74LS191 U17
25LS14 U8
74LS10 U18
74LS74 U19
74LS09 U5
74LS32 U4
74LS04 U9
74LS08 U37
74LS00 U40
74LS04 U32
74LS09 U1
74LS04 U9
74LS10 U18
74LS74 U19
7.5 MHz
OUTPUT
DCL
CD0
CD7
VCL
TO SHT 5
ID275 SHT 5
ID276 SHT 5
B INPUT SHT 5
WAIT 14
END
BOS
DRAW
RED
GRN
BLU
+12V
-5V
= 86 PIN CONNECTOR
= 4 PIN MOLEX
= 24 PIN SOCKET
NOTES 1
QTY REQD | CODE IDENT | PART OR IDENTIFYING NO. | NOMENCLATURE OR DESCRIPTION
PARTS LIST
UNLESS OTHERWISE SPECIFIED DIMENSIONS ARE IN INCHES TOLERANCES ARE:
FRACTIONS ± DECIMALS .XX ± .XXX ± ANGLES ±
MATERIAL
FINISH
DO NOT SCALE DRAWING
CONTRACT NO.
APPROVALS | DATE
DRAWN SON DUONG | 10-8-80
CHECKED JEFF PEASE | 11-3-80
Gremlin Industries, Inc.
San Diego, California 92123
X-Y Control Board
SIZE D | CODE IDENT NO. | DRAWING NO. 800-0163 | REV G
SCALE NONE | SHEET 6 OF 6
800-3155 | 700-0054
NEXT ASSY | USED ON
APPLICATION
800-0163 G

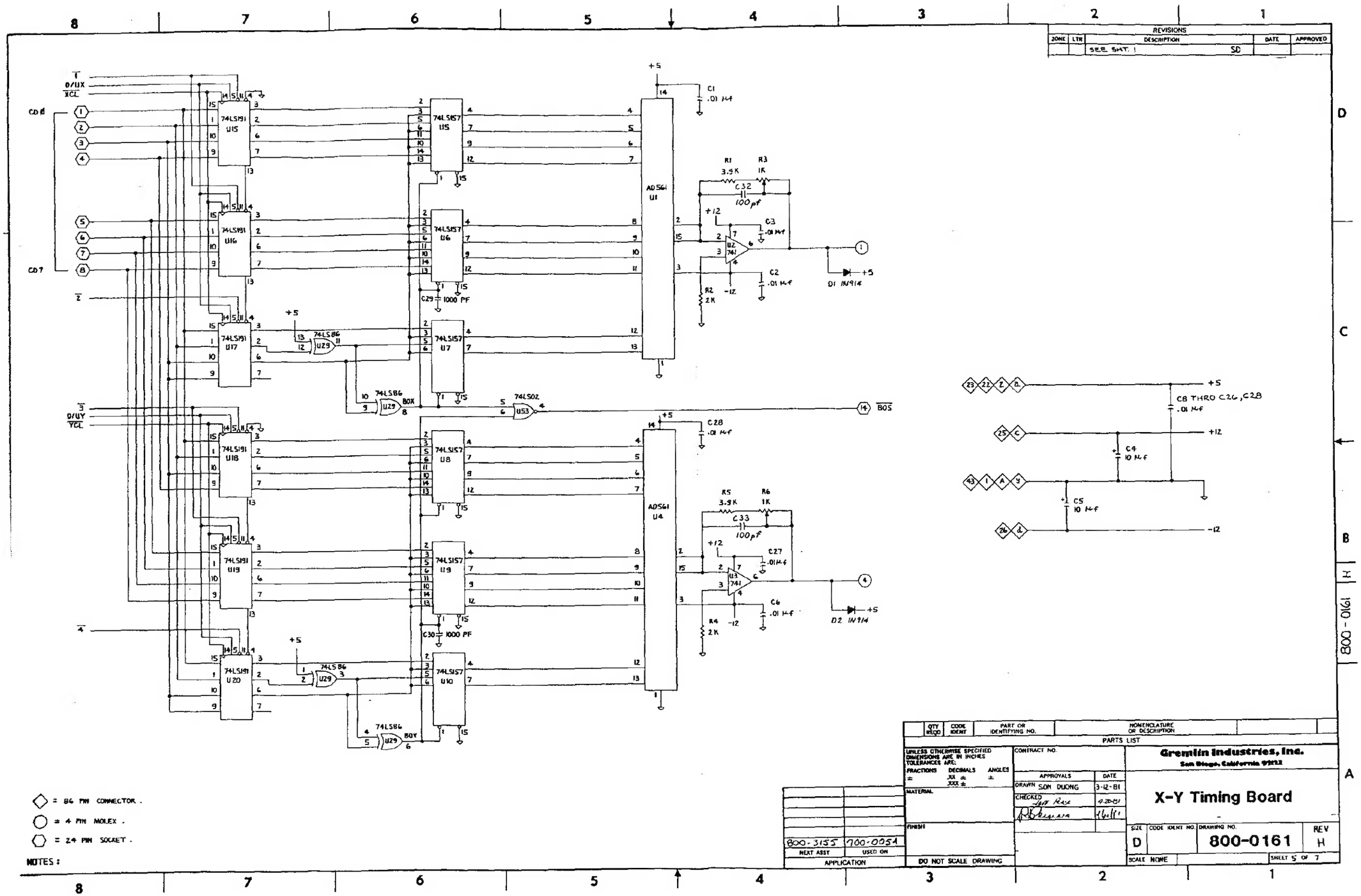

REVISIONS
ZONE | LTR | DESCRIPTION | DATE | APPROVED
SEE SHT. 1 SD
74LS191 U15
74LS191 U16
74LS191 U17
74LS191 U18
74LS191 U19
74LS191 U20
74LS157 U5
74LS157 U6
74LS157 U7
74LS157 U8
74LS157 U9
74LS157 U10
74LS86 U29
74LS02 U53
AD561 U1
AD561 U4
C1 .01 µf
C28 .01 µf
C29 1000 PF
C30 1000 PF
C32 100pf
C33 100pf
R1 3.9K
R3 1K
R5 3.9K
R6 1K
R2 2K
R4 2K
C2 .01 µf
C3 .01 µf
C6 .01 µf
C27 .01 µf
D1 1N914
D2 1N914
C8 THRO C26, C28 .01 µf
C4 10 µf
C5 10 µf
BOS
CD0
CD7
D/UX
XCL
D/UY
YCL
◇ = 86 PIN CONNECTOR.
○ = 4 PIN MOLEX.
⬡ = 24 PIN SOCKET.
NOTES:
QTY REQD | CODE IDENT | PART OR IDENTIFYING NO. | NOMENCLATURE OR DESCRIPTION
PARTS LIST
UNLESS OTHERWISE SPECIFIED DIMENSIONS ARE IN INCHES TOLERANCES ARE:
FRACTIONS ± DECIMALS .XX ± .XXX ± ANGLES ±
MATERIAL
FINISH
DO NOT SCALE DRAWING
CONTRACT NO.
APPROVALS | DATE
DRAWN SON DUONG 3-12-81
CHECKED 4-20-81
Gremlin Industries, Inc.
San Diego, California 92122
X-Y Timing Board
SIZE D | CODE IDENT NO. | DRAWING NO. 800-0161 | REV H
SCALE NONE | SHEET 5 OF 7
800-3155 | 700-0054
NEXT ASSY | USED ON
APPLICATION
800-0161 H

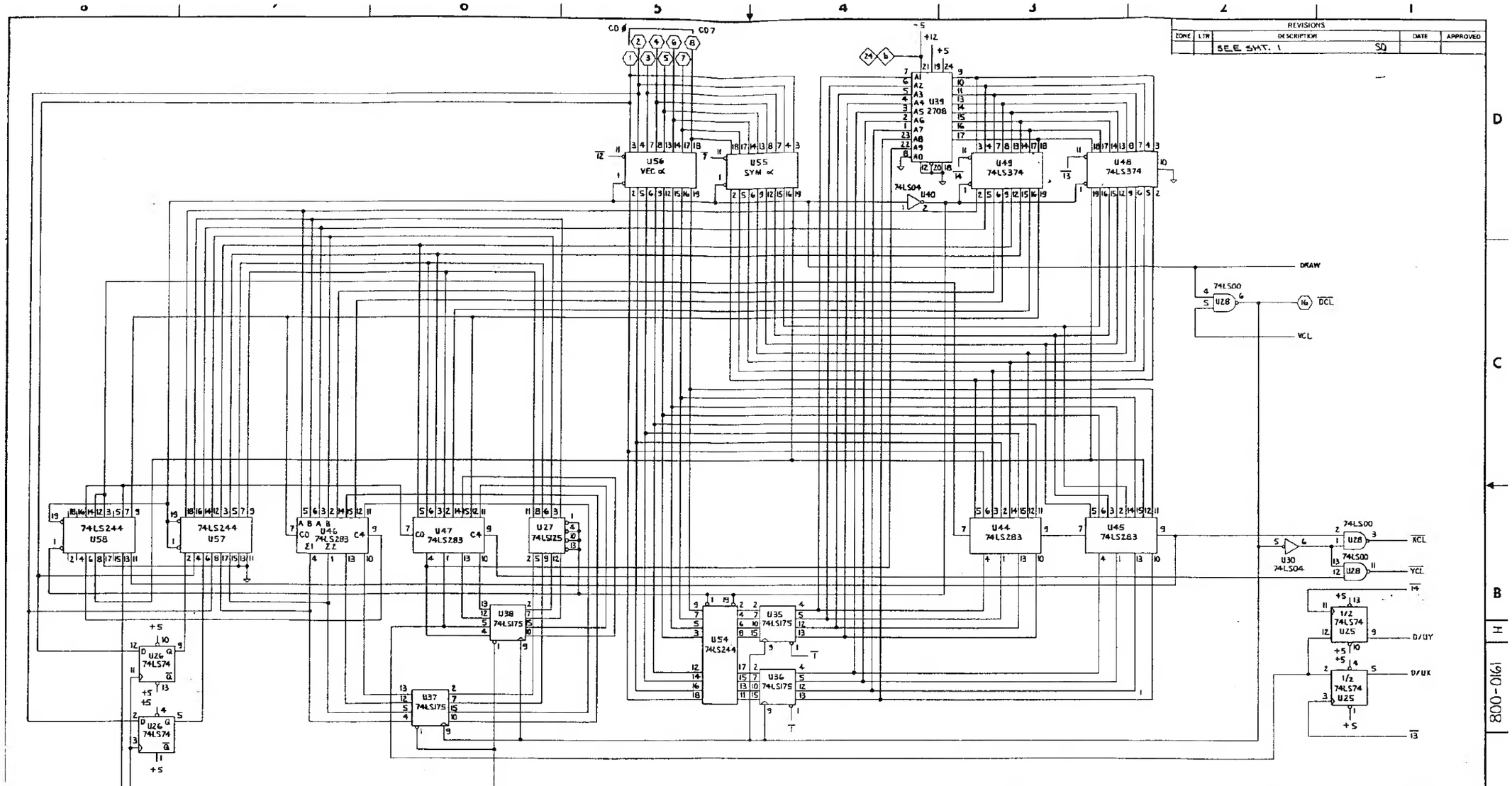

REVISIONS				
ZONE	LTR	DESCRIPTION	DATE	APPROVED
		SEE SHT. 1 SQ		

QTY REQD	CODE IDENT	PART OR IDENTIFYING NO.	NOMENCLATURE OR DESCRIPTION

PARTS LIST

UNLESS OTHERWISE SPECIFIED DIMENSIONS ARE IN INCHES TOLERANCES ARE:
FRACTIONS ± DECIMALS .XX ± .XXX ± ANGLES ±

MATERIAL

FINISH

DO NOT SCALE DRAWING

CONTRACT NO.

APPROVALS	DATE
DRAWN SON DUONG	3-16-81
CHECKED Jeff Pease	4-20-81
[signature]	4/21/81

Gremlin Industries, Inc.
San Diego, California 92123

X-Y Timing Board

SIZE	CODE IDENT NO.	DRAWING NO.	REV
D		800-0161	H

SCALE NONE SHEET 6 OF 7

NEXT ASSY	USED ON
800-3155	700-0054

APPLICATION

800-0161 H

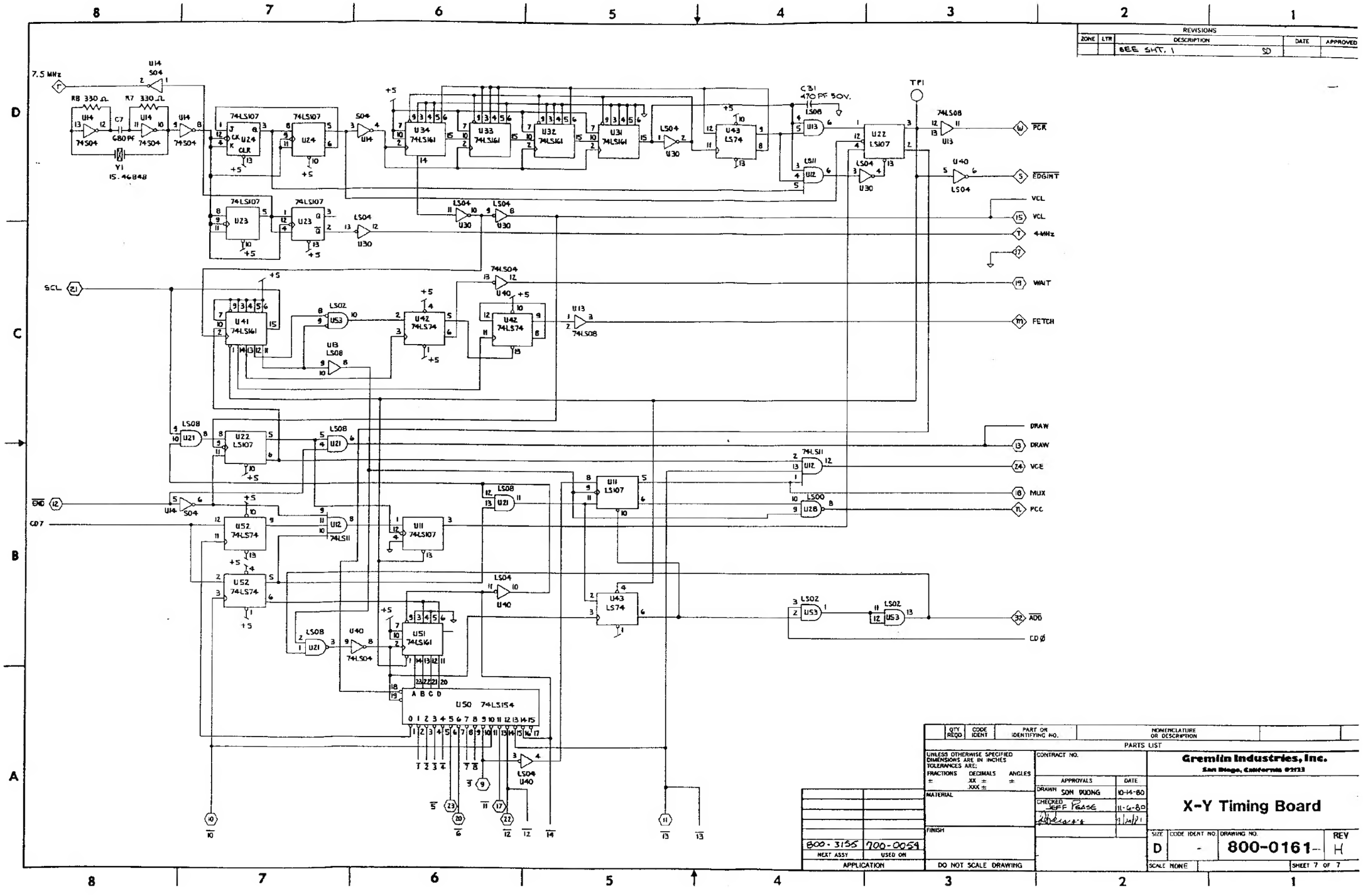

REVISIONS
ZONE | LTR | DESCRIPTION | DATE | APPROVED
SEE SHT. 1 SD
7.5 MHz
U14 S04
R8 330 Ω
R7 330 Ω
C7 680 PF
Y1 15.46848
74LS107
U24
U23
U34 74LS161
U33 74LS161
U32 74LS161
U31 74LS161
U43 LS74
C31 470 PF 50V.
U22 LS107
TP1
74LS08
U13
U40
LS04
U30
LS11
U12
PCR
EDGINT
VCL
4-MHz
WAIT
FETCH
SCL
U41 74LS161
U42 74LS74
LS02
U53
LS08
U21
DRAW
VCE
MUX
PCC
74LS11
LS00
U28
U11 LS107
U52 74LS74
U51 74LS161
U50 74LS154
ADD
CDØ
END
CD7
QTY REQD | CODE IDENT | PART OR IDENTIFYING NO. | NOMENCLATURE OR DESCRIPTION
PARTS LIST
UNLESS OTHERWISE SPECIFIED DIMENSIONS ARE IN INCHES TOLERANCES ARE:
FRACTIONS ± DECIMALS .XX ± .XXX ± ANGLES ±
MATERIAL
FINISH
DO NOT SCALE DRAWING
CONTRACT NO.
APPROVALS | DATE
DRAWN SON DUONG 10-14-80
CHECKED JEFF PEASE 11-6-80
Gremlin Industries, Inc.
San Diego, California 92123
X-Y Timing Board
SIZE D | CODE IDENT NO. - | DRAWING NO. 800-0161- | REV H
SCALE NONE | SHEET 7 OF 7
800-3155 NEXT ASSY | 700-0054 USED ON
APPLICATION

REVISIONS				
ZONE	LTR	DESCRIPTION	DATE	APPROVED
		SEE SHT 1 FOR REV		

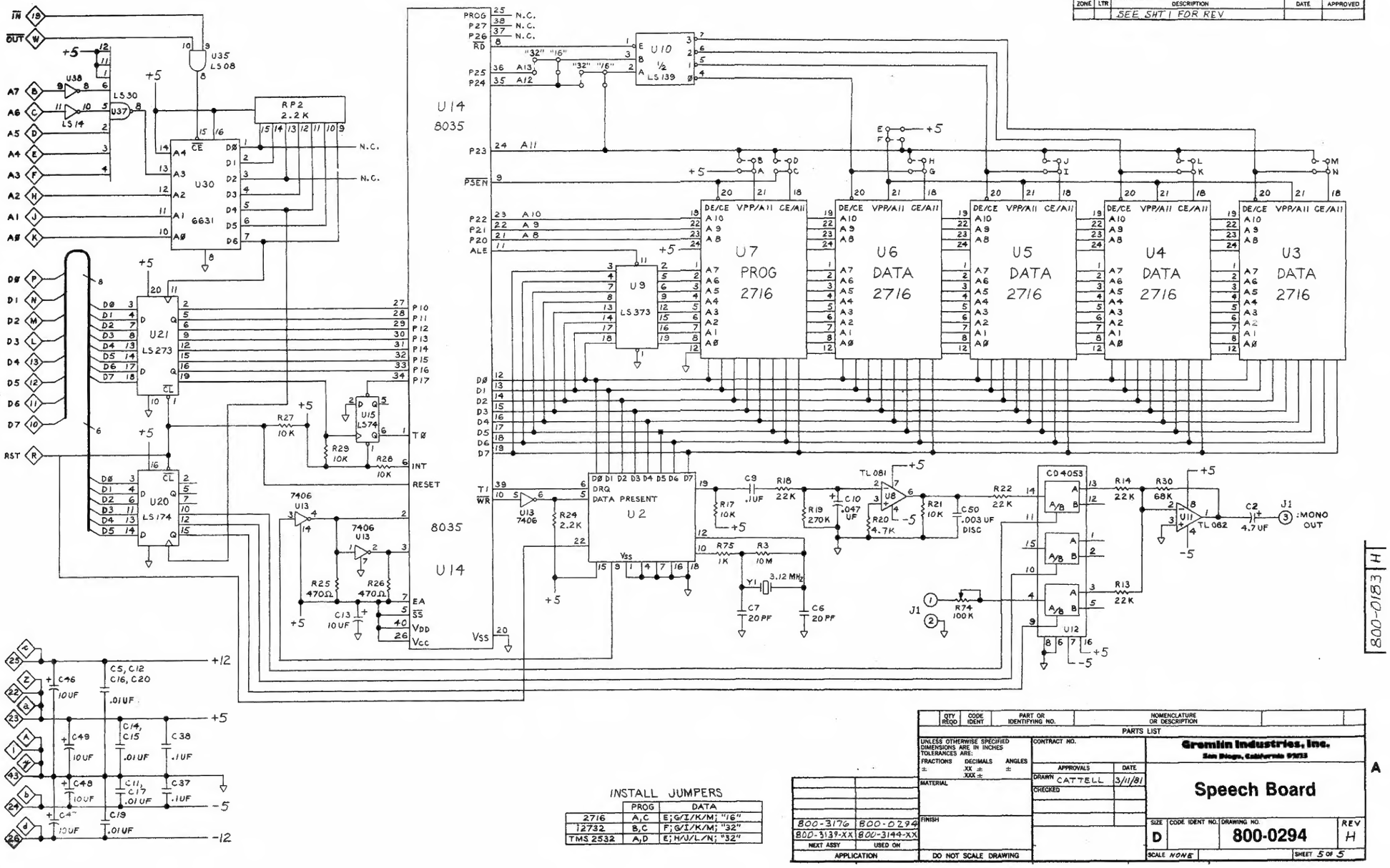

INSTALL JUMPERS		
	PROG	DATA
2716	A,C	E;G/I/K/M; "16"
12732	B,C	F;G/I/K/M; "32"
TMS 2532	A,D	E;H/J/L/N; "32"

QTY REQD	CODE IDENT	PART OR IDENTIFYING NO.	NOMENCLATURE OR DESCRIPTION
			PARTS LIST

UNLESS OTHERWISE SPECIFIED DIMENSIONS ARE IN INCHES
TOLERANCES ARE:
FRACTIONS ± | DECIMALS .XX ± .XXX ± | ANGLES ±

CONTRACT NO.

Gremlin Industries, Inc.
San Diego, California 92123

APPROVALS	DATE
DRAWN CATTELL	3/11/81
CHECKED	

MATERIAL

FINISH

DO NOT SCALE DRAWING

NEXT ASSY	USED ON
800-3176	800-0294
800-3139-XX	800-3144-XX
APPLICATION	

Speech Board

SIZE	CODE IDENT NO.	DRAWING NO.	REV
D		800-0294	H

SCALE NONE | SHEET 5 OF 5

800-0183 H

A

REVISIONS				
ZONE	LTR	DESCRIPTION	DATE	APPROVED
	D	SEE SHT # 1 M.G.A.		

200HZ A SHT 7
200HZ B SHT 7
10HZ SHT 7
50HZ SHT 7
WBN SHT 7
FIRE BALL SHT 7
EXPLOSION 3 SHT 7
EXPLOSION 1 SHT 7
EXPLOSION 2 SHT 7
TORPEDO 2 SHT 7
TORPEDO 1 SHT 7
SUM VCA SHT 7
PSG SHT 7
ENEMY SHIP SHT 7
SKITTER SHT 7
BUFFER SHT 7
AUDIO OUTPUT
BOUNCE

QTY REQD	CODE IDENT	PART OR IDENTIFYING NO.	NOMENCLATURE OR DESCRIPTION	ITEM NO.

PARTS LIST

UNLESS OTHERWISE SPECIFIED DIMENSIONS ARE IN INCHES
TOLERANCES ARE:
FRACTIONS ± DECIMALS .XX ± .XXX ± ANGLES ±

CONTRACT NO.

Gremlin/SEGA
San Diego, California 92121

APPROVALS	DATE
DRAWN Wyman	4-17-81
CHECKED G GLEICE	4-22-81
MECH	
ELEC	
MFG	
PROJECT	

MATERIAL
FINISH
DO NOT SCALE DRAWING

Sound Board

SIZE	CODE IDENT NO.	DRAWING NO.	REV.
D		800-3174	D

SCALE NONE SHEET 8 OF 8

NEXT ASSY USED ON
APPLICATION

800-3174 D

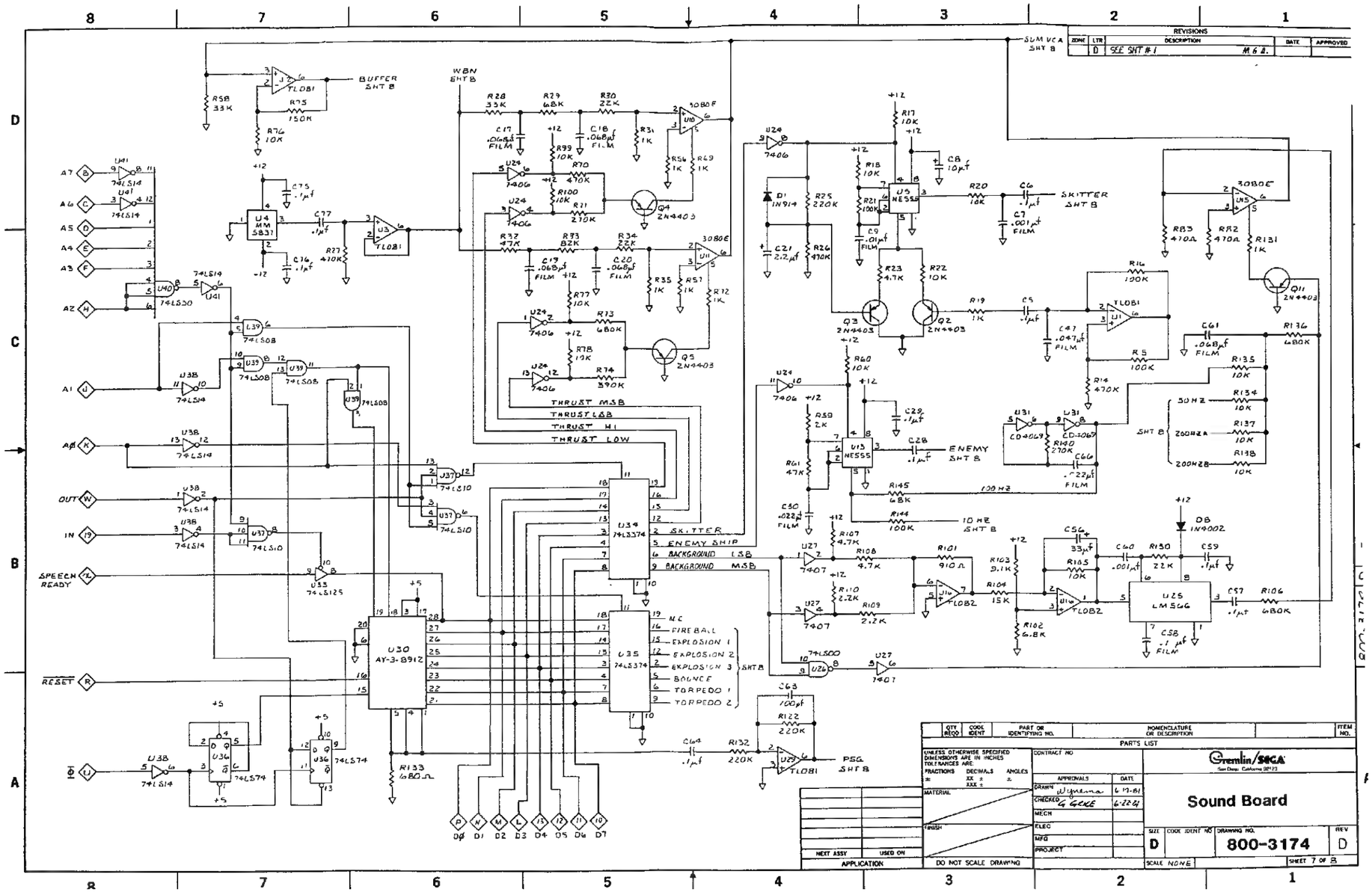

QTY REQD	CODE IDENT	PART OR IDENTIFYING NO.	NOMENCLATURE OR DESCRIPTION	ITEM NO.

PARTS LIST

UNLESS OTHERWISE SPECIFIED DIMENSIONS ARE IN INCHES TOLERANCES ARE:
FRACTIONS ± DECIMALS XX ± XXX ± ANGLES ±

MATERIAL

FINISH

NEXT ASSY | USED ON

APPLICATION

DO NOT SCALE DRAWING

CONTRACT NO

APPROVALS		DATE
DRAWN	Wyneman	6-17-81
CHECKED	G GEKE	6-22-81
MECH		
ELEC		
MFG		
PROJECT		

Gremlin/SEGA
San Diego, California 92123

Sound Board

SIZE	CODE IDENT NO	DRAWING NO.	REV
D		800-3174	D

SCALE NONE

SHEET 7 OF 8

REVISIONS				
ZONE	LTR	DESCRIPTION	DATE	APPROVED
		SEE SH #1 SD		

NOTES :(UNLESS OTHERWISE SPECIFIED)
1. ALL OP AMPS ARE TL082 .
2. ◯ IS G-BC BUS

QTY REQD	CODE IDENT	PART OR IDENTIFYING NO	NOMENCLATURE OR DESCRIPTION	ITEM NO.
		PARTS LIST		

UNLESS OTHERWISE SPECIFIED DIMENSIONS ARE IN INCHES
TOLERANCES ARE
FRACTIONS ± DECIMALS XX ± XXX ± ANGLES ±

CONTRACT NO.

MATERIAL

FINISH

NEXT ASSY | USED ON

APPLICATION

DO NOT SCALE DRAWING

APPROVALS	DATE
DRAWN SON DUONG	10-23-81
CHECKED G. GORKE	3-10-82
MECH	
ELEC	
MFG	
PROJECT	

Gremlin/SEGA

UNIVERSAL SOUND BOARD

SIZE	CODE IDENT NO	DRAWING NO	REV
D		800-0377	A

SCALE NONE | SHEET 6 OF 25

800-0377 A

REVISIONS				
ZONE	LTR	DESCRIPTION	DATE	APPROVED
		SEE SH 1 SD		

QTY REQD	CODE IDENT	PART OR IDENTIFYING NO	NOMENCLATURE OR DESCRIPTION	ITEM NO.

PARTS LIST

UNLESS OTHERWISE SPECIFIED DIMENSIONS ARE IN INCHES
TOLERANCES ARE
FRACTIONS ± DECIMALS .XX ± .XXX ± ANGLES ±

MATERIAL

FINISH

DO NOT SCALE DRAWING

CONTRACT NO

APPROVALS	DATE
DRAWN SON DUONG	0-28-81
CHECKED G. GRICE	3-10-82
MECH	
ELEC	
MFG	
PROJECT	

NEXT ASSY | USED ON

APPLICATION

Gremlin/SEGA

UNIVERSAL SOUND BOARD

SIZE	CODE IDENT NO	DRAWING NO	REV
D		800-0377	A

SCALE NONE SHEET 7 OF 23

800-0377 A

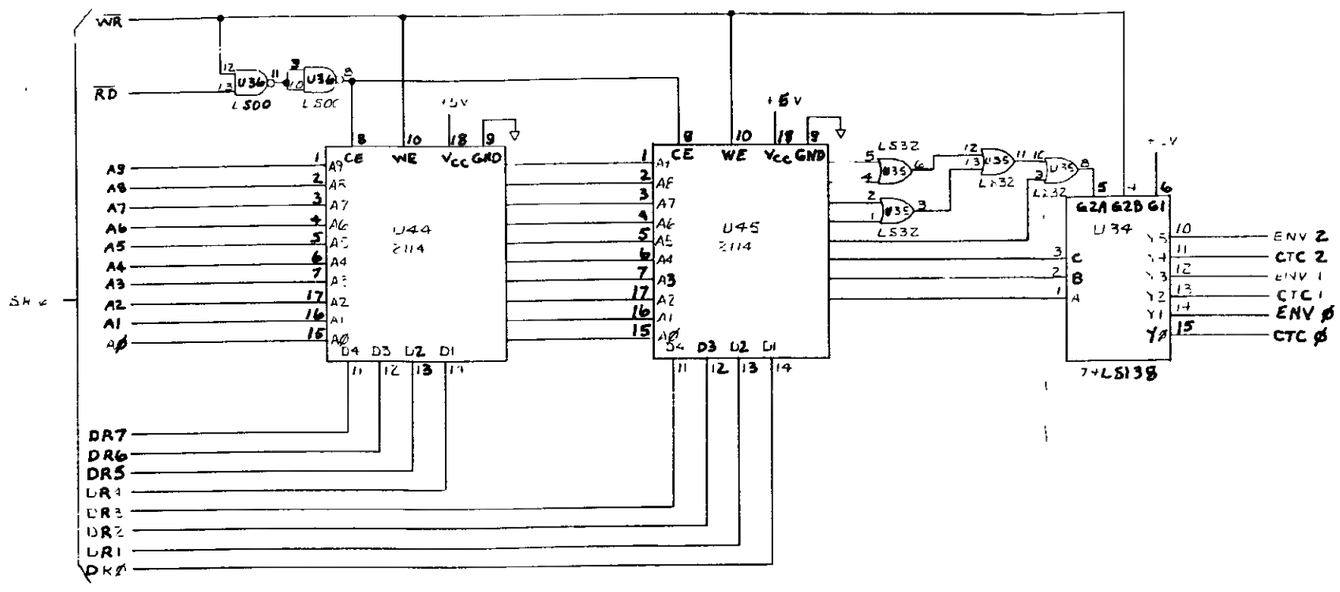

REVISIONS				
ZONE	LTR	DESCRIPTION	DATE	APPROVED
	–	SEE SHT 1		

QTY REQD	CODE IDENT	PART OR IDENTIFYING NO	NOMENCLATURE OR DESCRIPTION	ITEM NO.

PARTS LIST

UNLESS OTHERWISE SPECIFIED DIMENSIONS ARE IN INCHES TOLERANCES ARE
FRACTIONS ± DECIMALS XX ± XXX ± ANGLES ±

MATERIAL

FINISH

DO NOT SCALE DRAWING

CONTRACT NO

APPROVALS	DATE
DRAWN	4-19-82
CHECKED	6-22-82
MECH	
ELEC	
MFG	
PROJECT	

Gremlin/SEGA

UNIVERSAL SOUND BOARD

SIZE	CODE IDENT NO	DRAWING NO	REV
D		800-0377	A

SCALE 1 SHEET 8 OF 8

NEXT ASSY	USED ON
APPLICATION	

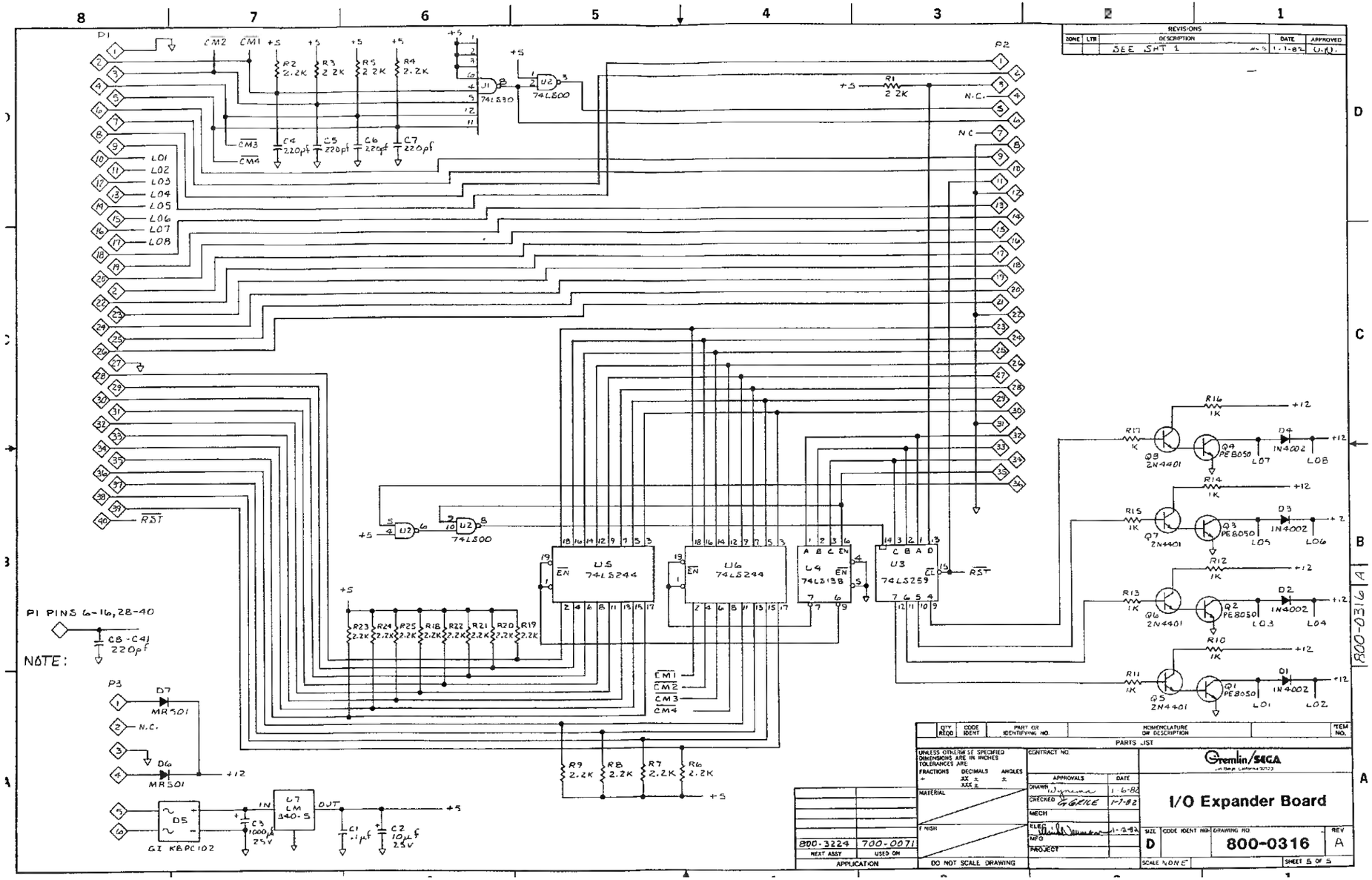

REVISIONS				
ZONE	LTR	DESCRIPTION	DATE	APPROVED
		SEE SHT 1	1-7-82	U.J.

PARTS LIST

QTY REQD	CODE IDENT	PART OR IDENTIFYING NO.	NOMENCLATURE OR DESCRIPTION	ITEM NO.

UNLESS OTHERWISE SPECIFIED DIMENSIONS ARE IN INCHES
TOLERANCES ARE
FRACTIONS ± DECIMALS XX ± XXX ± ANGLES ±

CONTRACT NO.

APPROVALS	DATE
DRAWN	1-6-82
CHECKED GREILE	1-7-82
MECH	
ELEC	1-7-82
MFG	
PROJECT	

MATERIAL

FINISH

DO NOT SCALE DRAWING

800-3224 NEXT ASSY | 700-0071 USED ON | APPLICATION

Gremlin/SEGA

I/O Expander Board

SIZE	CODE IDENT NO.	DRAWING NO.	REV
D		800-0316	A

SCALE NONE | SHEET 5 OF 5

800-0316 A1

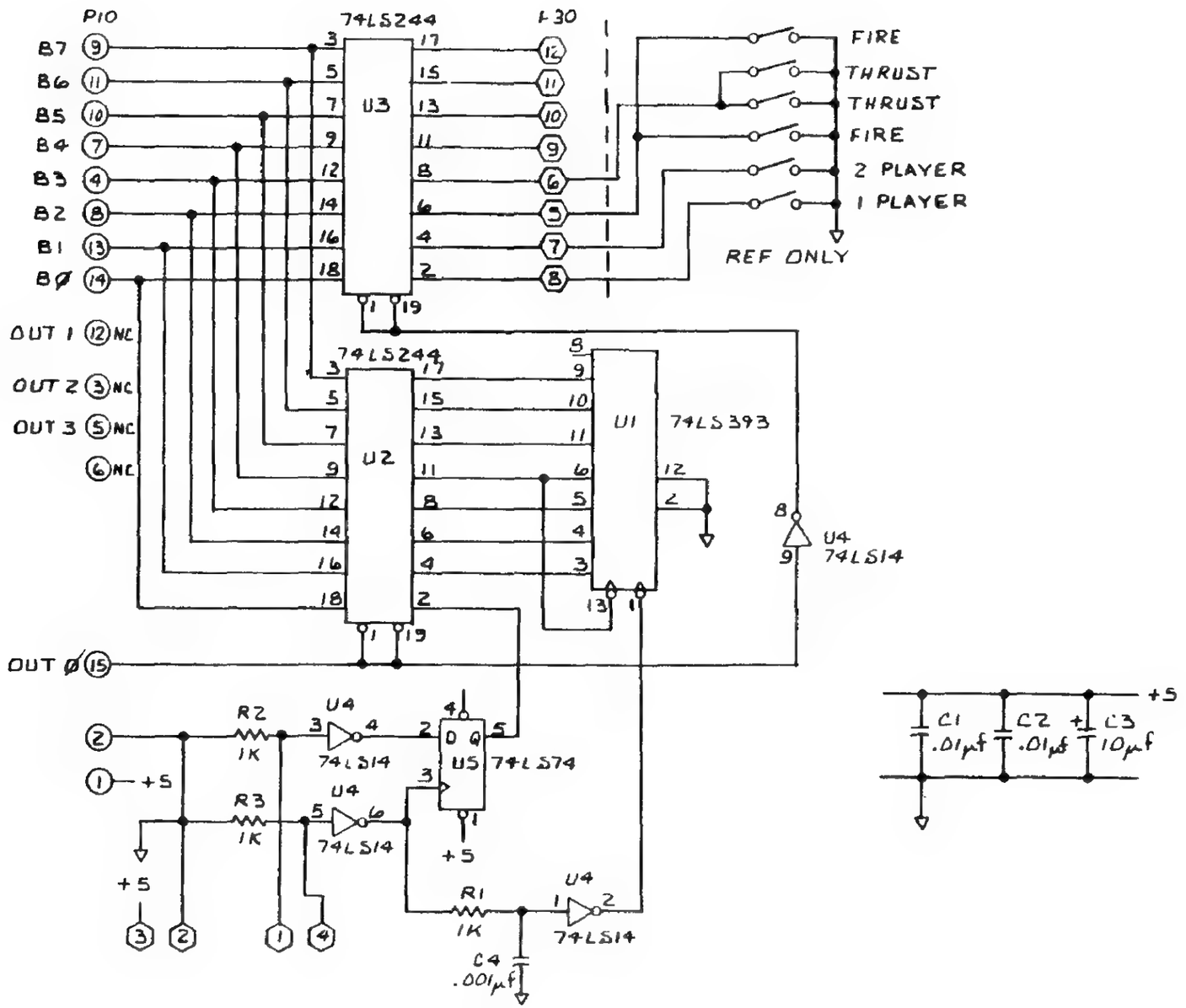

Single Player Control Panel Interface
800-0374

REVISIONS				
ZONE	LTR	DESCRIPTION	DATE	APPROVED
	–	SEE SHT 1		

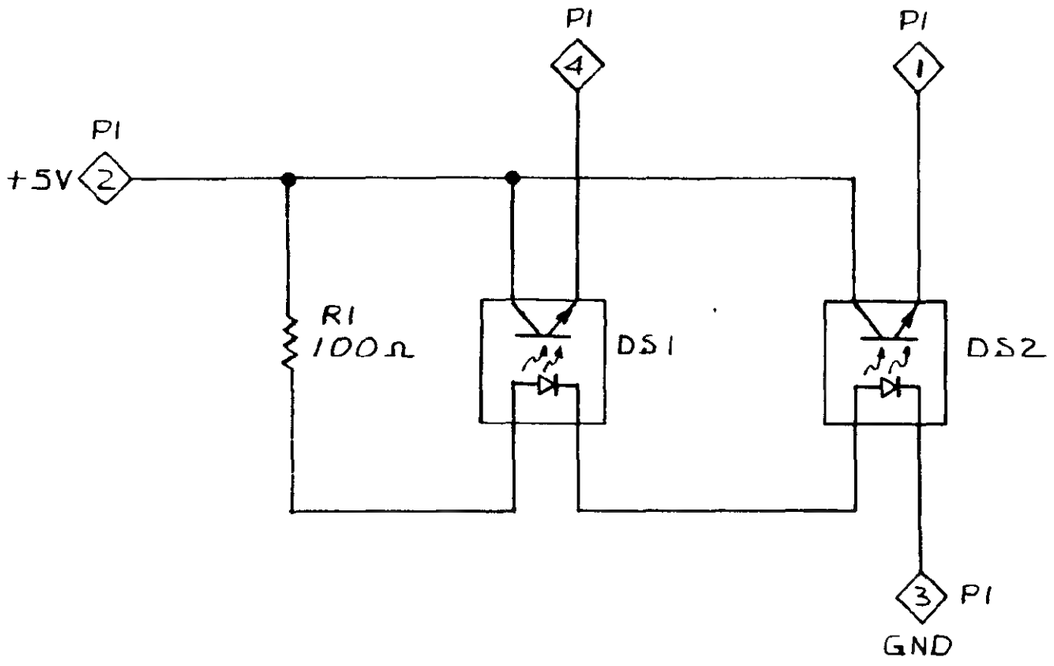

QTY REQD	PART OR IDENTIFYING NO.	NOMENCLATURE OR DESCRIPTION		ITEM NO.

PARTS LIST

NEXT ASSY	USED ON
APPLICATION	

UNLESS OTHERWISE SPECIFIED DIMENSIONS ARE IN INCHES
TOLERANCES ARE:
FRACTIONS ± DECIMALS .XX ± .XXX ± ANGLES ±

MATERIAL

FINISH

DO NOT SCALE DRAWING

CONTRACT NO.

APPROVALS	DATE
DRAWN Wynema	4.20.82
CHECKED	
MECH	
ELEC	
MFG	
PROJECT	

Gremlin/SEGA
San Diego California 92123

Rotary Interface

SIZE	CODE IDENT NO.	DRAWING NO	REV
B		800-0382	A

SCALE NONE SHEET 4 OF 4

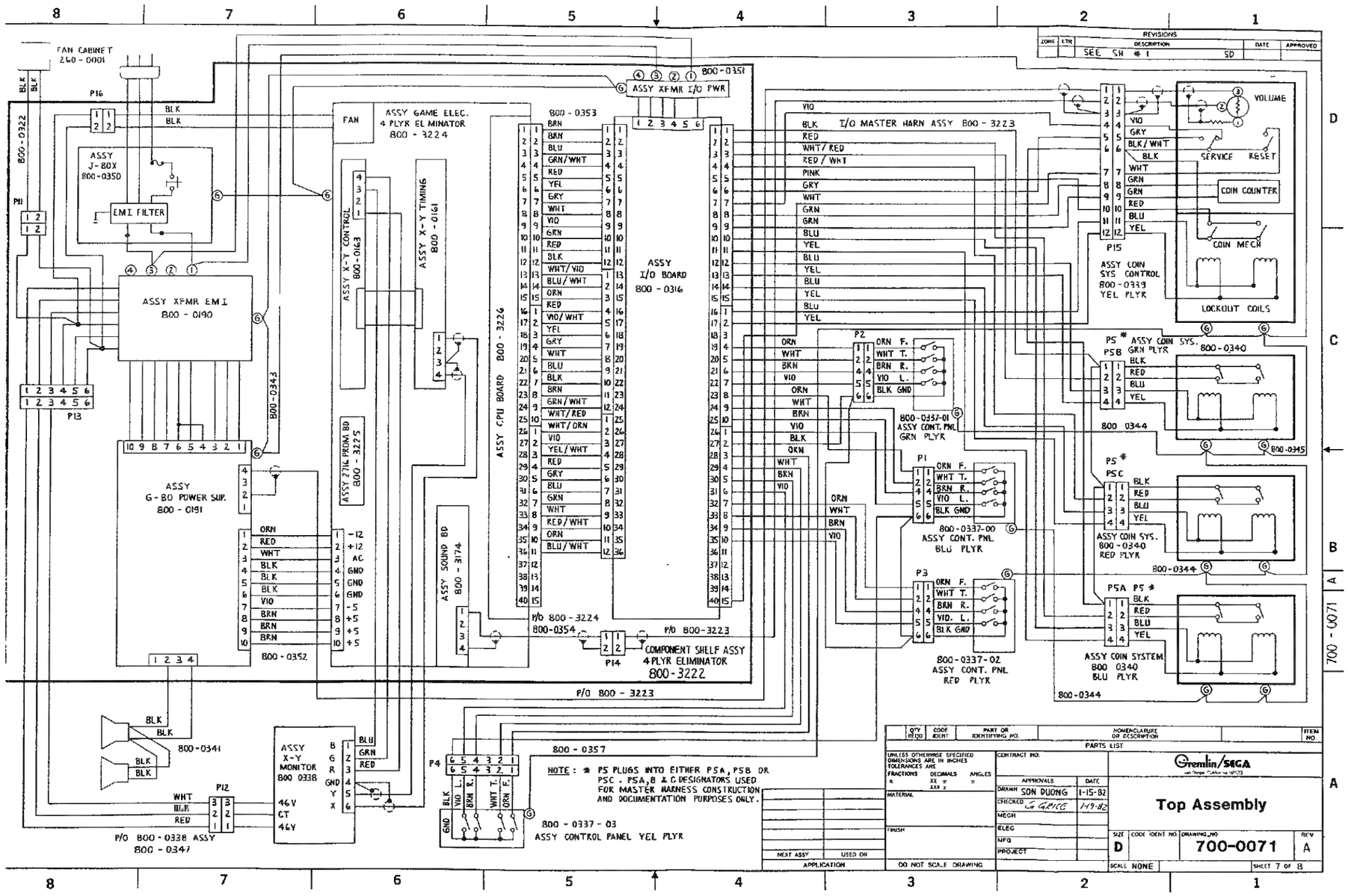
FAN CABINET 240-0001
ASSY J-BOX 800-0350
EMI FILTER
ASSY XFMR EMI 800-0190
ASSY G-80 POWER SUP. 800-0191
800-0322
800-0343
800-0352
800-0341
ASSY X-Y MONITOR 800 0338
P/O 800-0338 ASSY 800-0347
FAN
ASSY GAME ELEC. 4 PLYR EL MINATOR 800-3224
ASSY X-Y CONTROL 800-0163
ASSY X-Y TIMING 800-0161
ASSY 2716 PROM BD 800-3225
ASSY CPU BOARD 800-3226
800-0353
ASSY I/O BOARD 800-0316
ASSY SOUND BD 800-3174
P/O 800-3224
800-0354
P/O 800-3223
COMPONENT SHELF ASSY 4 PLYR ELIMINATOR 800-3222
P/O 800-3223
ASSY XFMR I/O PWR
800-0351
I/O MASTER HARN ASSY 800-3223
800-0357
NOTE: * P5 PLUGS INTO EITHER P5A, P5B OR P5C. P5A,B & C DESIGNATORS USED FOR MASTER HARNESS CONSTRUCTION AND DOCUMENTATION PURPOSES ONLY.
800-0337-03 ASSY CONTROL PANEL YEL PLYR
800-0337-01 ASSY CONT. PNL GRN PLYR
800-0337-00 ASSY CONT. PNL BLU PLYR
800-0337-02 ASSY CONT. PNL RED PLYR
VOLUME
SERVICE
RESET
COIN COUNTER
COIN MECH
LOCKOUT COILS
ASSY COIN SYS CONTROL 800-0339 YEL PLYR
P5 * ASSY COIN SYS. 800-0340 GRN PLYR
800 0344
800-0345
ASSY COIN SYS. 800-0340 RED PLYR
ASSY COIN SYSTEM 800 0340 BLU PLYR
800-0344
REVISIONS
SEE SH # 1
PARTS LIST
Gremlin/SEGA
Top Assembly
DRAWN SON DUONG 1-15-82
CHECKED G. GRICE 1-19-82
DO NOT SCALE DRAWING
SIZE D
DRAWING NO 700-0071
REV A
SCALE NONE
SHEET 7 OF 8
700-0071

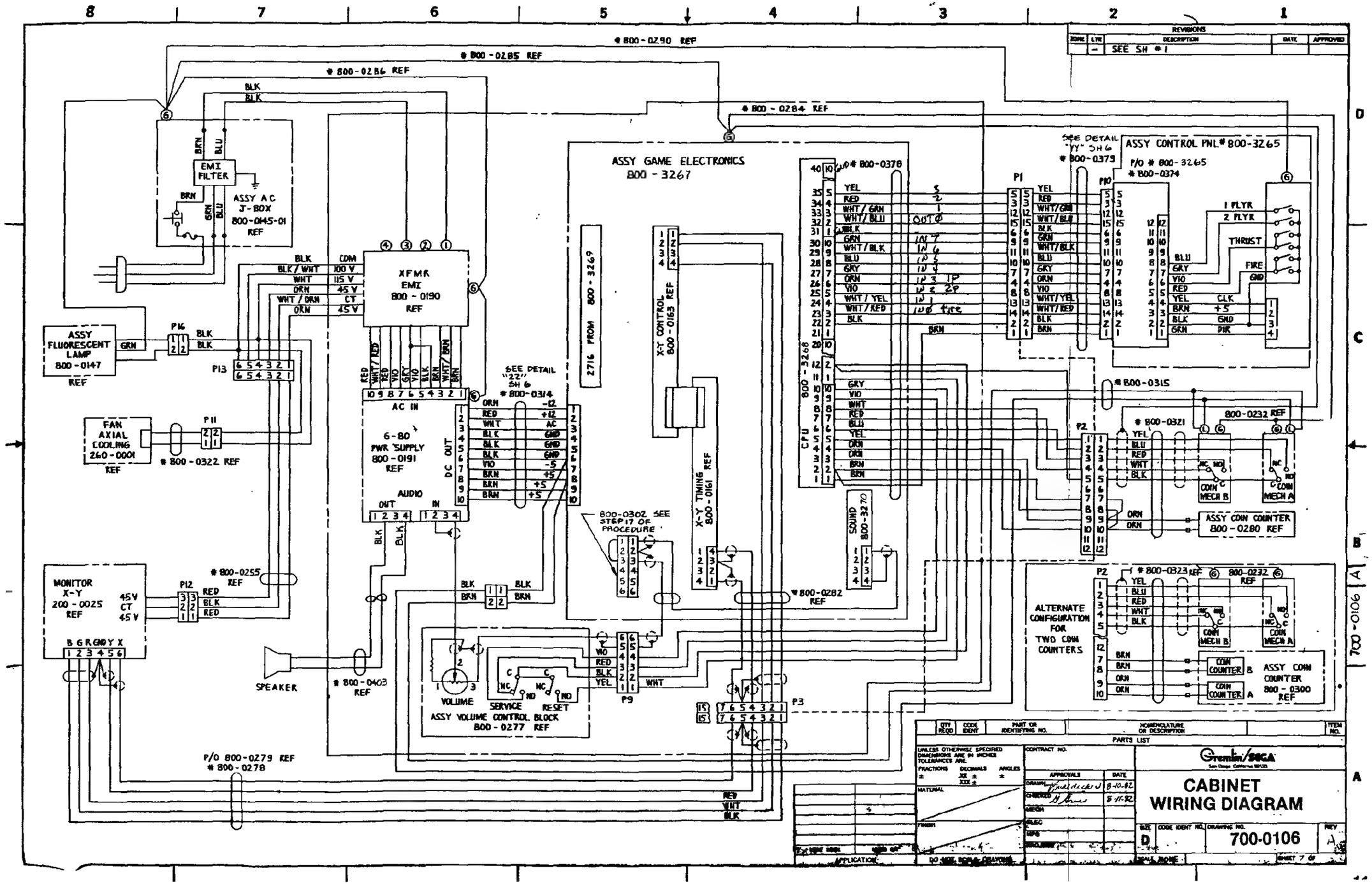

REVISIONS
SEE SH #1
ASSY GAME ELECTRONICS 800-3267
ASSY CONTROL PNL # 800-3265
P/O # 800-3265
800-0374
SEE DETAIL "YY" SH 6
800-0379
800-0378
2716 FROM 800-3269
X-Y CONTROL 800-0163 REF
X-Y TIMING 800-0161 REF
CPU 800-3268
SOUND 800-3270
EMI FILTER
ASSY AC J-BOX 800-0145-01 REF
XFMR EMI 800-0190 REF
ASSY FLUORESCENT LAMP 800-0147 REF
FAN AXIAL COOLING 260-0001 REF
800-0322 REF
6-80 PWR SUPPLY 800-0191 REF
AC IN
DC OUT
AUDIO
SEE DETAIL "22" SH 6
800-0314
MONITOR X-Y 200-0025 REF
800-0255 REF
SPEAKER
800-0403 REF
800-0302 SEE STEP 17 OF PROCEDURE
800-0282 REF
VOLUME
SERVICE
RESET
ASSY VOLUME CONTROL BLOCK 800-0277 REF
P/O 800-0279 REF
800-0278
800-0315
800-0321
800-0232 REF
ASSY COIN COUNTER 800-0280 REF
ALTERNATE CONFIGURATION FOR TWO COIN COUNTERS
800-0323 REF
800-0232 REF
ASSY COIN COUNTER 800-0300 REF
1 PLYR
2 PLYR
THRUST
FIRE
PARTS LIST
Gremlin/SEGA
CABINET WIRING DIAGRAM
700-0106
D
A

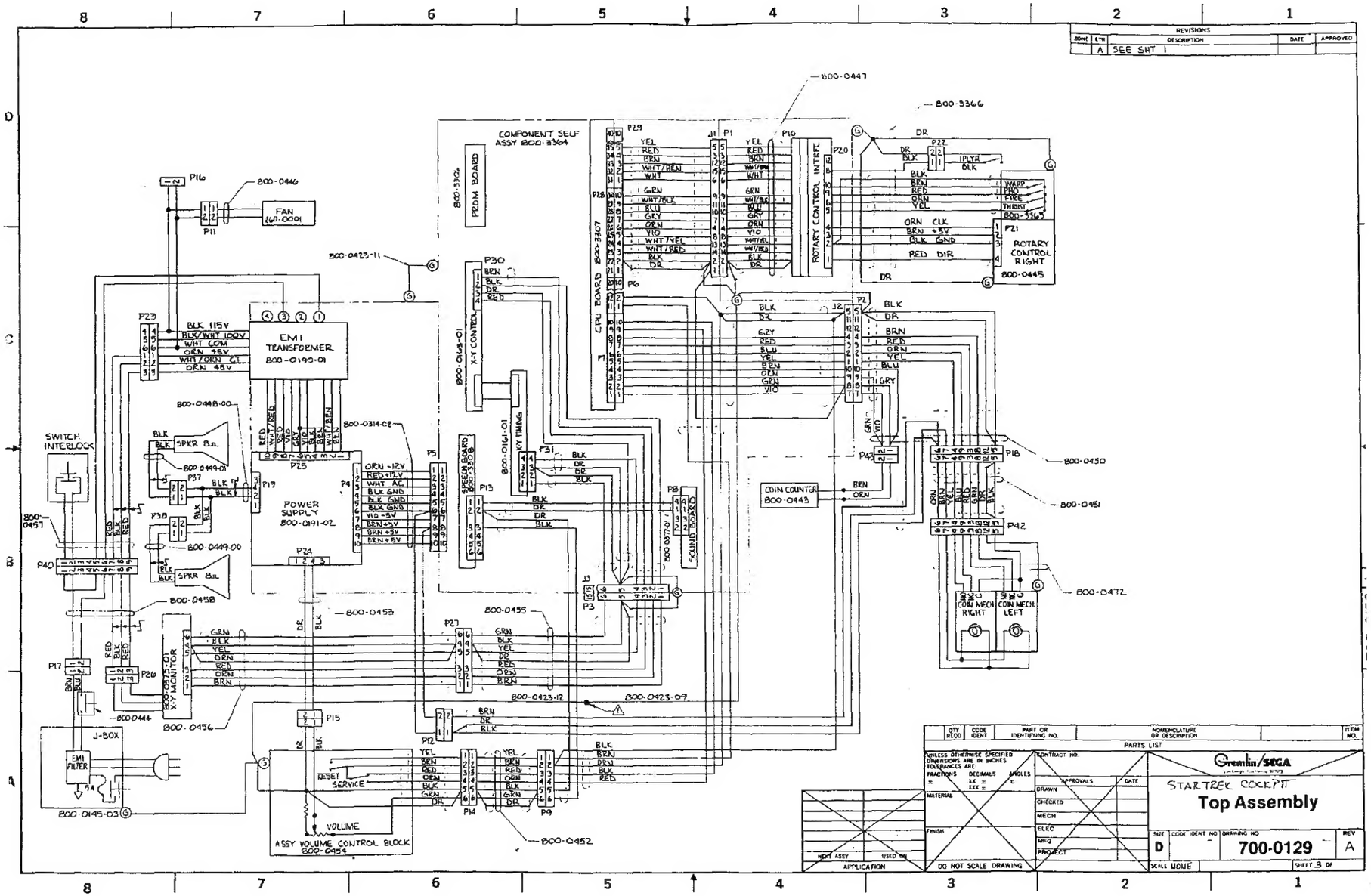

REVISIONS
ZONE
LTR
DESCRIPTION
DATE
APPROVED
A
SEE SHT 1
COMPONENT SELF ASSY 800-3364
PROM BOARD
CPU BOARD 800-3307
ROTARY CONTROL INTRFC
ROTARY CONTROL RIGHT 800-0445
EMI TRANSFORMER 800-0190-01
POWER SUPPLY 800-0191-02
SWITCH INTERLOCK
SPKR 8Ω
X-Y CONTROL
X-Y TIMING
SPEECH BOARD 800-3308
SOUND BOARD
COIN COUNTER 800-0443
COIN MECH RIGHT
COIN MECH LEFT
X-Y MONITOR
J-BOX
EMI FILTER
ASSY VOLUME CONTROL BLOCK 800-0454
RESET
SERVICE
VOLUME
FAN 260-0001
800-0446
800-0447
800-3366
800-0423-11
800-0448-00
800-0449-01
800-0449-00
800-0314-02
800-0458
800-0453
800-0455
800-0423-12
800-0423-09
800-0456
800-0444
800-0145-03
800-0452
800-0450
800-0451
800-0472
800-0457
800-0163-01
800-0161-01
800-0377-01
800-0375-01
PARTS LIST
QTY REQD
CODE IDENT
PART OR IDENTIFYING NO.
NOMENCLATURE OR DESCRIPTION
ITEM NO.
UNLESS OTHERWISE SPECIFIED DIMENSIONS ARE IN INCHES TOLERANCES ARE:
FRACTIONS
DECIMALS
ANGLES
MATERIAL
FINISH
CONTRACT NO.
APPROVALS
DATE
DRAWN
CHECKED
MECH
ELEC
MFG
PROJECT
NEXT ASSY
USED ON
APPLICATION
DO NOT SCALE DRAWING
Gremlin/SEGA
STARTREK COCKPIT
Top Assembly
SIZE
D
CODE IDENT NO
DRAWING NO
700-0129
REV
A
SCALE NONE
SHEET 3 OF

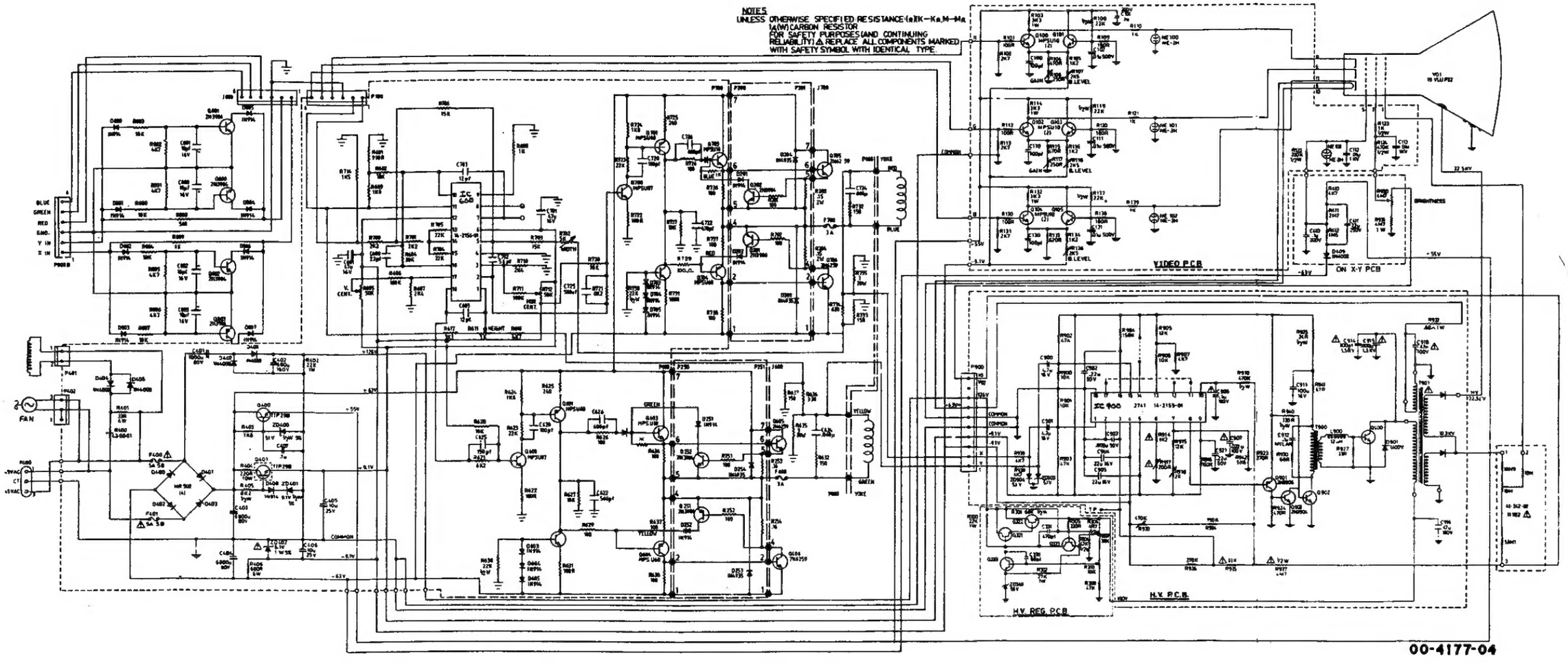

Model Number GO8-003

NOTES
UNLESS OTHERWISE SPECIFIED RESISTANCE (Ω) K-
1/4(W) CARBON RESISTOR
FOR SAFETY PURPOSES (AND CONTINUING
RELIABILITY) Δ REPLACE ALL COMPONENTS
WITH SAFETY SYMBOL WITH IDENTICAL TY

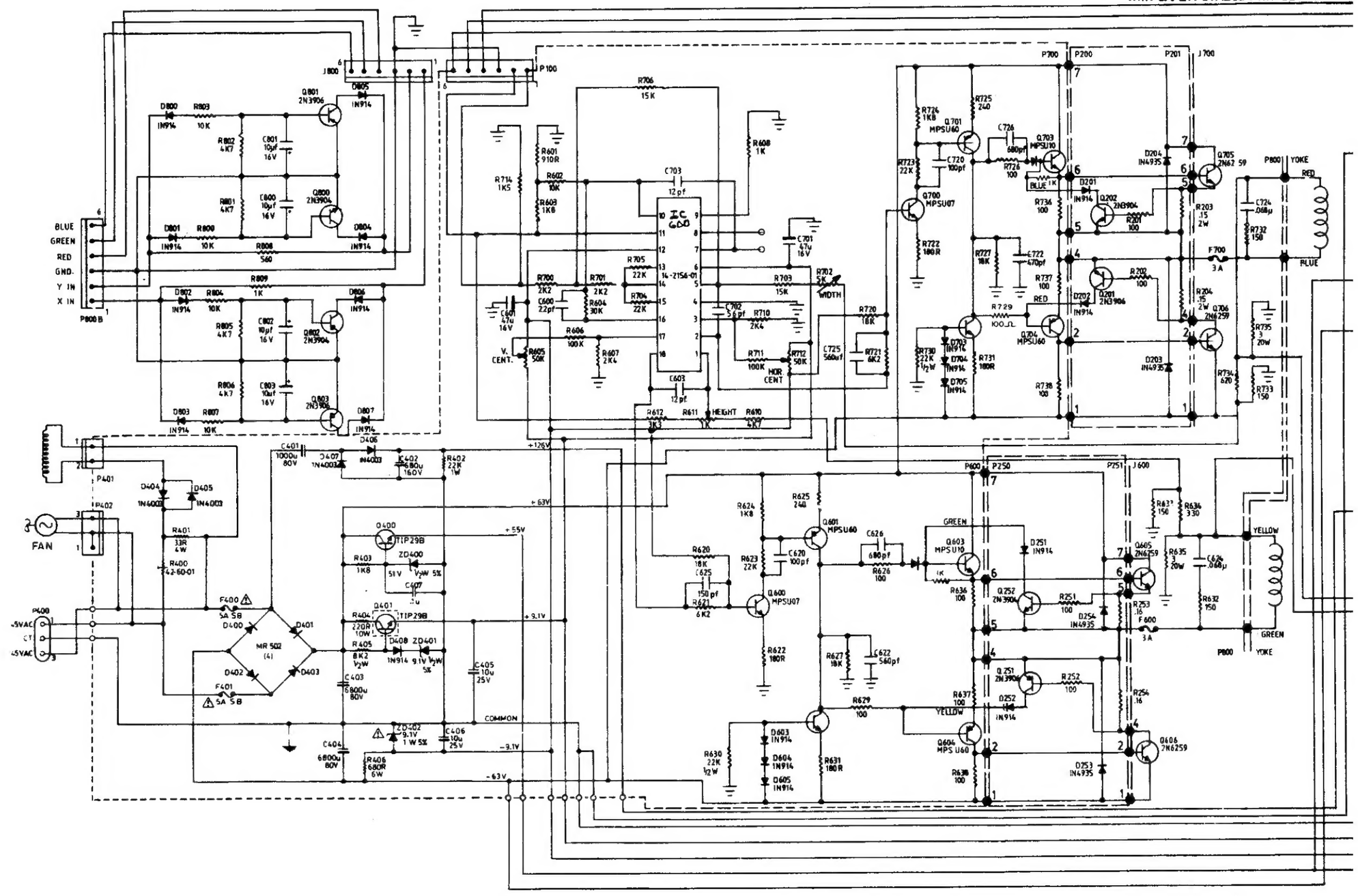

THERWISE SPECIFIED RESISTANCE (Ω)K—KΩ, M—MΩ
(W) CARBON RESISTOR
OR SAFETY PURPOSES (AND CONTINUING
ELIABILITY) ⚠ REPLACE ALL COMPONENTS MARKED
ITH SAFETY SYMBOL WITH IDENTICAL TYPE.

VIDEO P.C.B

ON X-Y PCB

H.V. P.C.B.

H.V. REG P.C.B

00-4177-04